AERODROME CHART ICAO

Bearings are magnetic
Distances in metres
Elevation in ft AMSL
Coordinates WGS 84

TWR 120.800 (120.100)
GND 121.925
ATIS 134.875

RWY	QFU	THR
12	114°	N 44°32'24.01" E 011°16'33.55"
30	294°	N 44°31'52.97" E 011°17'59.79"

bearing strength		RWY	PCN 112/F/A/W/T
T	PCN 79/F/A/W/T	E	PCN 75/F/B/W/T
A	PCN 120/F/A/W/T	F	PCN 89/F/B/W/T
B	PCN 120/F/A/W/T	G	PCN 118/F/A/W/T
C	PCN 85/F/A/W/T	H	PCN 74/F/B/W/T
D	PCN 76/F/B/W/T	J	PCN 115/F/A/W/T
TL	PCN 120/F/A/W/T	K	PCN 79/F/A/W/T
TM	PCN 120/F/A/W/T	TS	PCN 111/F/A/W/T
TN	PCN 120/F/A/W/T	TU	PCN 91/F/B/X/T
TP	PCN 91/F/B/X/T	TV	PCN 137/F/A/W/T
TQ	PCN 79/F/A/W/T	TW	PCN 113/F/A/W/T
TR	PCN 113/F/A/W/T	TY	PCN 120/F/A/W/T
TK	PCN 137/F/A/W/T		

AD ELEV 123	BOLOGNA / BORGO PANIGALE
APRON ELEV 123	L I P E — 44°31'51" N 011°17'49" E

metres 0 150 300 450 600
feet 0 450 900 1350 1800

VAR +3° E – 2017.0
Annual rate of change 7' E

REMARKS

1) In order to avoid damage due to jet blast or slip stream pilots are requested to taxy with minimum thrust.
2) F and G must be used only as EXIT TWYs.
3) Normal use of J as exit TWY, K as entry TWY.
4) Emergency road: not lighted and not usable by ACFT
5) (*) CAT I Runway Holding Position
6) (**) CAT II/III Runway Holding Position
7) (***) Intermediate Holding Position
8) Stop Bar
9) No Entry Bar
10) NO ENTRY signs
11) RWY guard lights

CHANGE: AVGAS SERVICE AND TAXILANE NOVEMBER PERMANENTLY WITHDRAWN

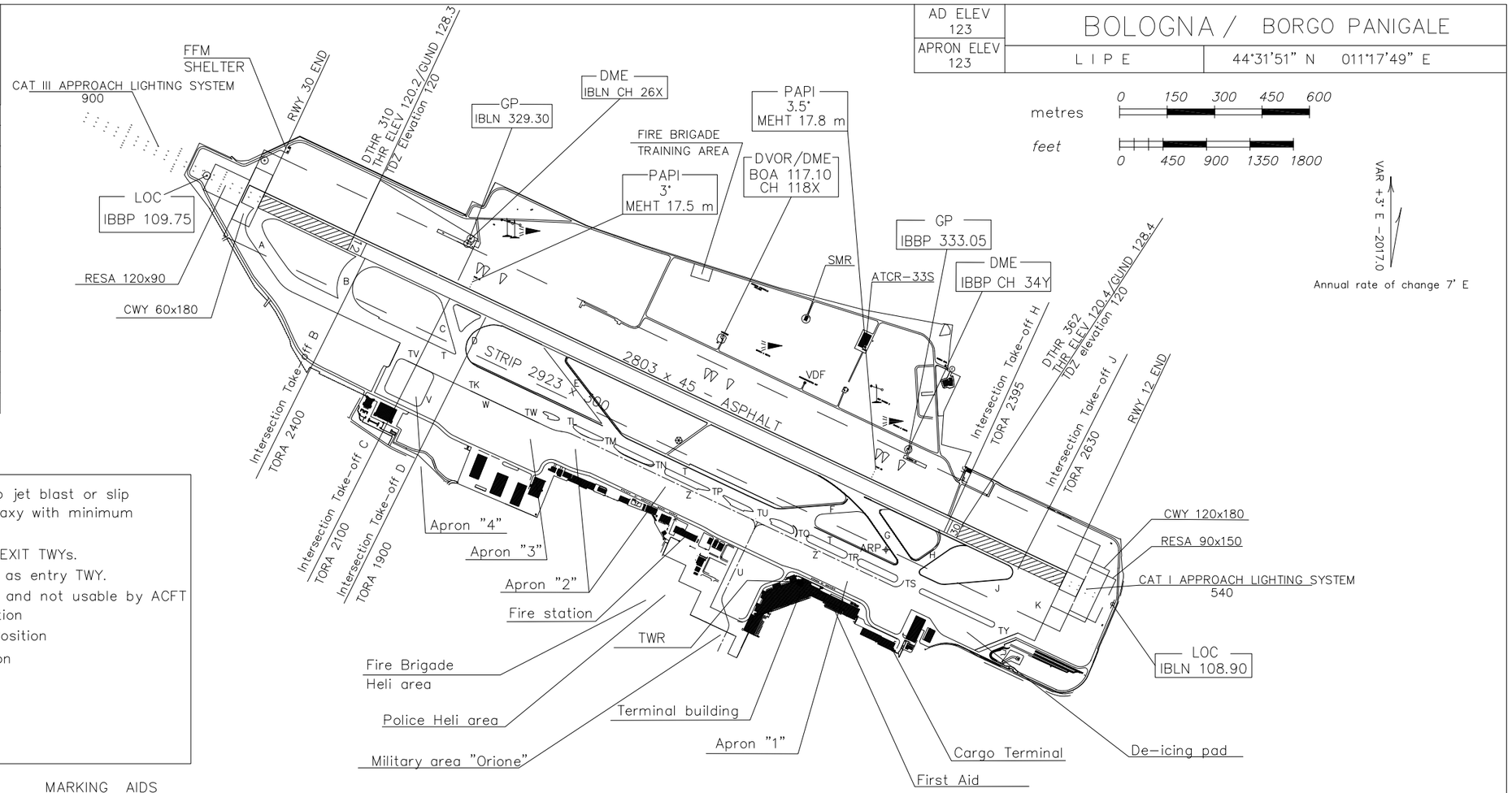

MARKING AIDS

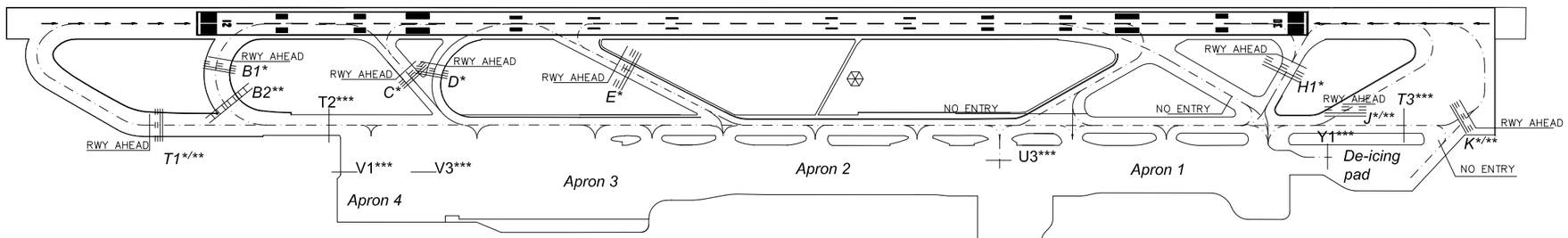

LIGHTING AIDS

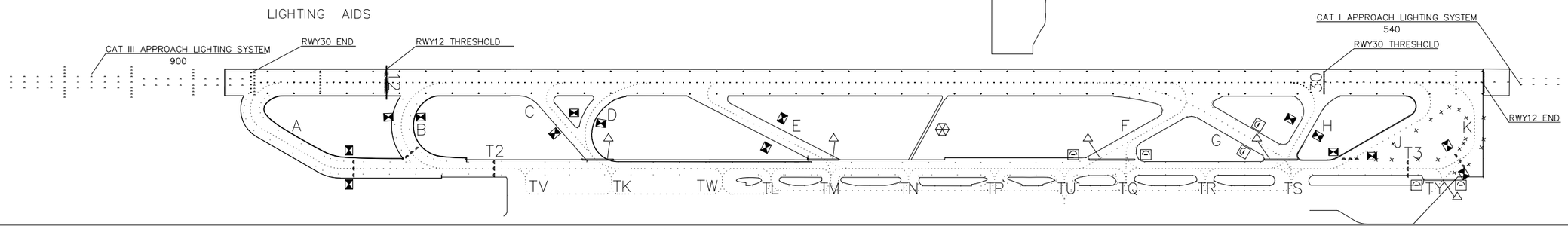

Data provided by Aeroporto G.Marconi di Bologna S.p.A.